Project Design Phase

Problem – Solution Fit Template

Proposed Solution Template

Date	22-02-2026
Team ID	LTVIP2026TMIDS74471
Project Name	ToyCraft tales: tableau's vision into toy manufacturer data
Maximum Marks	2 Marks

Problem – Solution Fit Template :

The Problem–Solution Fit means identifying a key issue faced by electricity consumers and decision-makers specifically the **lack of clear, understandable insights into electricity consumption patterns** and **delivering a Tableau based interactive dashboard** that solves this problem effectively through visual analytics. This approach helps energy users, analysts, and policy developers uncover patterns, improve efficiency, and make smarter energy decisions.

Purpose :

- Solve **electricity consumption complexities** in a way that suits both technical and non-technical users.
- Speed up energy insight adoption by leveraging **familiar, visual dashboards via Tableau.**
- Sharpen public awareness and policy direction with **data-backed visuals and storytelling.**
- Increase touch-points with users by solving **frequent energy mismanagement, peak load confusion, and cost concerns.**

Problem Solution Fit:

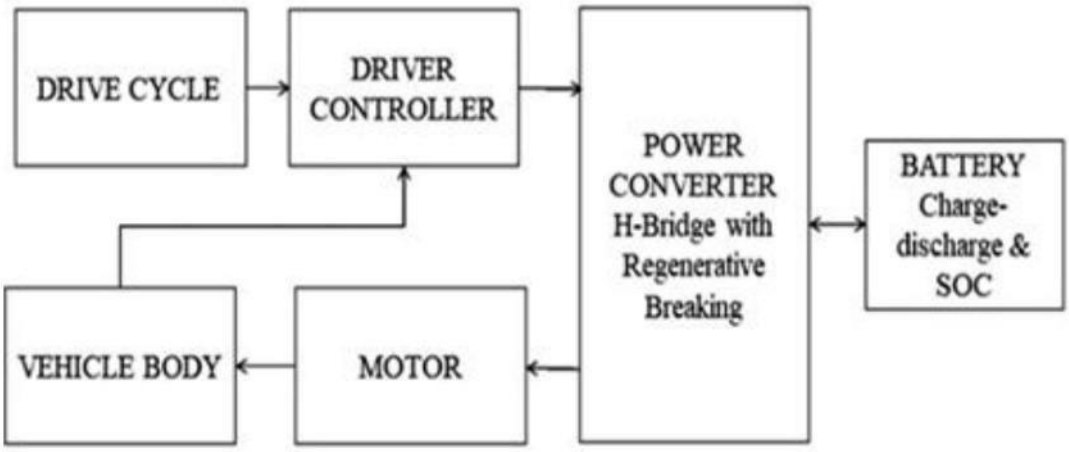

Problem Area	Users struggle to understand and analyse electricity consumption trends across different sectors, times, and regions.
Solution	Develop an interactive Tableau dashboard to visualize and explore electricity consumption patterns.
Key Features	• Sector-wise consumption breakdown • Time-series trend analysis • Regional usage comparison • Peak vs off-peak usage visualization
Value Proposition	Empowers users to identify patterns, reduce consumption, and make data-driven energy decisions through engaging and interactive visual insights.

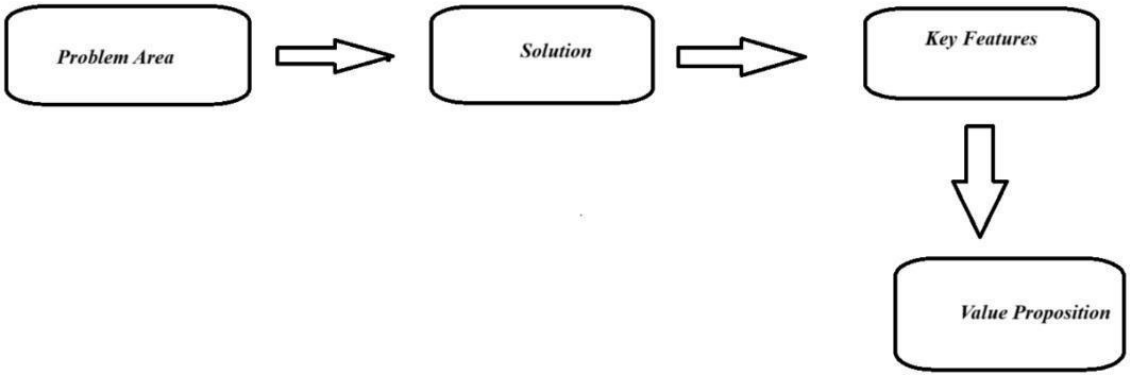
Problem Area
Solution
Key Features
Value Proposition